ICC EVALUATION SERVICE

ICC Evaluation Service, Inc.
Birmingham Regional Office
900 Montclair Road, Suite A
Birmingham, AL 35213
tel: 205.599.9800
fax: 205.599.9850
www.icc-es.org

June 24, 2010

TO: **PARTIES INTERESTED IN EVALUATION REPORTS ON CONCRETE WITH VIRGIN CELLULOSE FIBERS**

SUBJECT: Revisions to the Acceptance Criteria for Concrete with Virgin Cellulose Fibers, Subject AC217-0610-R1 (MO/ME)

Dear Madam or Sir:

Enclosed is a copy of the subject revised acceptance criteria approved by the ICC-ES Evaluation Committee on June 15, 2010, effective July 1, 2010. The virgin cellulose fibers are added to concrete to reduce plastic shrinkage cracking of reinforced concrete and structural plain concrete and/or to reduce shrinkage and temperature cracking in structural plain concrete slabs on grade. Section A7.0 of Annex A was revised to change the conditions of acceptance for the plastic shrinkage crack testing, from a minimum crack reduction of 50 percent to a reduction of 40 percent. The revision makes AC217 consistent with the ICC-ES Acceptance Criteria for Concrete with Synthetic Fibers (AC32), Section A7.0. As other changes, references to the 2009 *International Building Code*® (IBC) and the 2009 the *International Residential Code*® (IRC) were added to Sections 1.1 and 1.3.1, with appropriate editions of test standards revised in Table 1 and reference to UL 263-03 added to Sections 1.3 and 4.10.

The proposed revisions will not affect the existing evaluation report issued under this criteria.

Evaluation reports issued on or after the effective date noted above, and falling within the scope of this criteria, will be required to comply with the enclosed edition of the criteria. Evaluation reports issued prior to the effective date may be in compliance either with the enclosed acceptance criteria or with the previous edition. Evaluation reports based on a superseded version of an acceptance criteria must be brought into compliance with the most recent edition at the time the reports are reissued. Therefore, applicants should submit data verifying compliance at the time they apply for re-examination.

If you have any questions, please contact Michael O'Reardon, at (800) 423-6587, extension 5685. You may also reach us by e-mail at es@icc-es.org.

Yours very truly,

Gary G. Nichols

Gary G. Nichols, P.E., SECB
Vice President

GGN/raf

Enclosure

cc: Evaluation Committee

ACCEPTANCE CRITERIA FOR CONCRETE WITH VIRGIN CELLULOSE FIBERS

AC217

Approved June 2010

Effective July 1, 2010

Previously approved June 2007, July 2003

PREFACE

Evaluation reports issued by ICC Evaluation Service, Inc. (ICC-ES), are based upon performance features of the International family of codes and other widely adopted code families, including the Uniform Codes, the BOCA National Codes, and the SBCCI Standard Codes. Section 104.11 of the *International Building Code®* reads as follows:

> The provisions of this code are not intended to prevent the installation of any materials or to prohibit any design or method of construction not specifically prescribed by this code, provided that any such alternative has been approved. An alternative material, design or method of construction shall be approved where the building official finds that the proposed design is satisfactory and complies with the intent of the provisions of this code, and that the material, method or work offered is, for the purpose intended, at least the equivalent of that prescribed in this code in quality, strength, effectiveness, fire resistance, durability and safety.

Similar provisions are contained in the Uniform Codes, the National Codes, and the Standard Codes.

This acceptance criteria has been issued to provide all interested parties with guidelines for demonstrating compliance with performance features of the applicable code(s) referenced in the acceptance criteria. The criteria was developed and adopted following public hearings conducted by the ICC-ES Evaluation Committee, and is effective on the date shown above. All reports issued or reissued on or after the effective date must comply with this criteria, while reports issued prior to this date may be in compliance with this criteria or with the previous edition. If the criteria is an updated version from the previous edition, a solid vertical line (|) in the margin within the criteria indicates a technical change, addition, or deletion from the previous edition. A deletion indicator (→) is provided in the margin where a paragraph has been deleted if the deletion involved a technical change. This criteria may be further revised as the need dictates.

ICC-ES may consider alternate criteria, provided the report applicant submits valid data demonstrating that the alternate criteria are at least equivalent to the criteria set forth in this document, and otherwise demonstrate compliance with the performance features of the codes. Notwithstanding that a product, material, or type or method of construction meets the requirements of the criteria set forth in this document, or that it can be demonstrated that valid alternate criteria are equivalent to the criteria in this document and otherwise demonstrate compliance with the performance features of the codes, ICC-ES retains the right to refuse to issue or renew an evaluation report, if the product, material, or type or method of construction is such that either unusual care with its installation or use must be exercised for satisfactory performance, or if malfunctioning is apt to cause unreasonable property damage or personal injury or sickness relative to the benefits to be achieved by the use of the product, material, or type or method of construction.

Acceptance criteria are developed for use solely by ICC-ES for purposes of issuing ICC-ES evaluation reports.

Copyright © (2010)

ACCEPTANCE CRITERIA FOR CONCRETE WITH VIRGIN CELLULOSE FIBERS (AC217)

1.0 INTRODUCTION

1.1 Purpose: The purpose of this acceptance criteria is to establish requirements for virgin cellulose fibers to be recognized in an ICC Evaluation Service, Inc. (ICC-ES), evaluation report under the 2009 and 2006 *International Building Code*® (IBC), the 2009 and 2006 *International Residential Code*® (IRC), the BOCA® *National Building Code*/1999 (NBC), the 1999 *Standard Building Code*© (SBC), and the 1997 *Uniform Building Code*™ (UBC). The bases of recognition are IBC Section 104.11, IRC Section R104.11, NBC Section 106.4, SBC Section 103.7 and UBC Section 104.2.8. Applicable code sections are IBC Sections 1909 (Structural Plain Concrete) and 1910 (Minimum Slab Provisions), and IRC Table R402.2 (Minimum Specified Compressive Strength of Concrete) and Section R506 [Concrete Floors (On Ground)]. Applicable code sections in the NBC are Sections 1901.0, 1902.0, and 1905; in the SBC are Sections 1901 and 1909; and in the UBC are Sections 1907.12, 1922 and 1922.3.

The reason for the development of this criteria is to set requirements for evaluation of virgin cellulose fibers for use in concrete, since the code does not provide requirements for evaluation of virgin cellulose fibers for use in concrete.

1.2 Scope: Virgin cellulose fibers are added to concrete to reduce plastic shrinkage cracking of reinforced concrete and structural plain concrete and/or to reduce shrinkage and temperature cracking in structural plain concrete slabs on grade.

1.2.1 Consideration shall be given to the volume, size and type of cellulose fibers used. Extrapolation to other volumes, sizes and types of fibers shall be documented in accordance with this acceptance criteria or by an engineering evaluation, signed, sealed and dated by a registered design professional.

1.2.2 The fibers are regarded as an admixture and are used in addition to any structural reinforcement, shrinkage and temperature reinforcement and joints required in the applicable code.

1.2.3 The cellulose fibers may be used in concrete over steel deck construction.

1.2.4 The cellulose fibers may be used in fire-resistive construction.

1.2.5 Cellulose fibers when used in concrete slabs exposed to abrasive and impact traffic conditions (e.g., forklifts), shall be used only for reduction of plastic shrinkage cracking.

1.3 Reference Standards: Where standards are referenced in this criteria, these standards shall be applied consistently with the code upon which compliance is based. Standard editions applicable to each code are summarized in Table 1.

1.3.1 Codes:

1.3.1.1 2009 and 2006 *International Building Code*® (IBC), International Code Council.

1.3.1.2 2009 and 2006 *International Residential Code*® (IRC), International Code Council.

1.3.1.3 BOCA® *National Building Code*/1999 (BNBC).

1.3.1.4 1999 *Standard Building Code*© (SBC).

1.3.1.5 1997 *Uniform Building Code*™ (UBC).

1.3.2 ASTM International Standards:

1.3.2.1 ASTM C 31 [see Table 1], Standard Practice for Method of Making and Curing Concrete Test Specimens in the Field.

1.3.2.2 ASTM C 39 [see Table 1], Test Method for Compressive Strength of Cylindrical Concrete Specimens.

1.3.2.3 ASTM C 78-02, Test Method for Flexural Strength of Concrete (Using Simple Beam with Third-Point Loading).

1.3.2.4 ASTM C 94 [see Table 1], Standard Specification for Ready-Mixed Concrete.

1.3.2.5 ASTM C 172 [see Table 1], Standard Practice for Sampling Freshly Mixed Concrete.

1.3.2.6 ASTM C 192 [see Table 1], Standard Practice for Making and Curing Concrete Test Specimens in the Laboratory.

1.3.2.7 ASTM C 234-91a, Test Method for Bond Strength[1].

1.3.2.8 ASTM C 403-06, Standard Test Method for Time of Setting of Concrete Mixtures by Penetration Resistance.

1.3.2.9 ASTM C 494-05a, Standard Specification for Chemical Admixtures for Concrete.

1.3.2.10 ASTM C 470-02a, Standard Specification for Molds for Forming Concrete Test Cylinders Vertically.

1.3.2.11 ASTM C 666-03, Test Method for Resistance of Concrete to Rapid Freezing and Thawing.

1.3.2.12 ASTM C 1018-97, Test Method for Flexural Toughness and First-Crack Strength of Fiber-Reinforced Concrete (Using Beam with Third-Point Loading).

1.3.2.13 ASTM C 1116-06 Specification for Fiber-Reinforced Concrete and Shotcrete.

1.3.2.14 ASTM D 698-00ae1, Test Method for Laboratory Compaction Characteristics of Soil Using Standard Effort.

1.3.2.15 ASTM D 1557 [see Table 1], Test Method for Laboratory Compaction Characteristics of Soil Using Modified Effort.

1.3.2.16 ASTM D 1695-96 (2001), Standard Terminology of Cellulose and Cellulose Derivatives.

1.3.2.17 ASTM D 6942-03, Standard Test Method for Stability of Cellulose Fibers in Alkaline Environments

1.3.2.18 ASTM E 119 [see Table 1], Test Methods for Fire Tests of Building Construction Materials.

1.3.2.19 ASTM E 136 [see Table 1], Standard Test Method for Behavior of Materials in a Vertical Tube Furnace at 750°C.

1.3.3 American Concrete Institute (ACI) Committee Reports:

1.3.3.1 ACI 305R-99, Specification on Hot Weather Concreting.

1.3.3.2 ACI 318 (-08, 2009 IBC; -05, 2006 IBC and IRC; -95, BNBC, SBC and UBC), Building Code Requirements for Structural Concrete.

1.3.3.3 ACI 544.2R-89 (1999), Measurement of Properties of Fiber-reinforced Concrete.

1.3.3.4 ACI 544.1R-96, State-of-the-Art Report on Fiber Reinforced Concrete.

1.3.4 ANSI/ASCE 3-91, Standard for the Structural Design of Composite Slabs, American Society of Civil Engineers.

1.3.5 UL 263-03 (2009 IBC and 2009 IRC), Standards for Fire Test of Building Construction and Materials, Underwriters Laboratories Inc.

1.4 Definitions:

1.4.1 Admixture: Admixture is material other than water, aggregate, or hydraulic cement used as an ingredient of concrete and added to concrete before or during its mixing to modify its properties.

1.4.2 Plastic Shrinkage Cracking: Plastic shrinkage cracking is cracking that occurs in the surface of fresh concrete soon after it is placed and while it is still plastic.

1.4.3 Reinforced Concrete: Reinforced concrete is defined in Section 2.2 of ACI 318.

1.4.4 Structural Plain Concrete: Structural plain concrete is defined in ACI 318.

1.4.5 Shrinkage and Temperature Cracking: Shrinkage and temperature cracking is cracking in tension due to a decrease in length or volume.

1.4.6 Virgin Cellulose Fibers: Virgin cellulose fibers are fibers composed partly or completely of cellulose. Cellulose is a naturally occurring organic polymer. The term “virgin” means that the fibers have been manufactured from the original natural raw material (i.e., trees, etc.) and are being used for the first time in a final product for consumer/commercial use and are not post-consumer recycled cellulose fiber. For more definitions of these and related words, ASTM D 1695, “Standard Terminology of Cellulose and Cellulose Derivatives,” shall be referenced.

2.0 BASIC INFORMATION

2.1 General: The following information shall be submitted:

2.1.1 Product Description: Complete information concerning material specifications, cellulose fiber type and source, size and fiber tensile strength as measured by zero-span tensile method.

2.1.2 Installation Instructions: Printed instructions for mixing and dosage rates as provided with the packaging of the product.

2.1.3 Packaging and Identification: A description of the method of packaging and field identification of product. Identification provisions shall include the evaluation report number.

2.2 Testing Laboratories: Testing laboratories shall comply with the ICC-ES Acceptance Criteria for Test Reports (AC85) and Section 4.2 of the ICC-ES Rules of Procedure for Evaluation Reports.

2.3 Test Reports: Test reports shall comply with AC85.

2.3.1 Test reports shall include the following:

2.3.2 Description of type and source of cellulose fiber (e.g. hardwood, softwood, grass, hemp, cotton).

2.3.3 Description of test procedure.

2.3.4 Statement on passing or failing, where applicable.

2.4 Product Sampling: Products shall be sampled in accordance with Section 3.0 of AC85.

3.0 TEST AND PERFORMANCE REQUIREMENTS

3.1 General: Consideration must be given to the volume ratio, size and type of fibers used. Extrapolation to other volumes, sizes and types of cellulose fibers shall be justified. Recognition in evaluation reports of cellulose fibers in concrete are divided into the following categories:

3.1.1 Where cellulose fibers are used in controlling plastic shrinkage cracking of reinforced concrete and structural plainconcrete, the fibers are regarded as an admixture and are used in addition to any structural reinforcement, and to any shrinkage and temperature reinforcement required in Section 1907.12 of the IBC, or joints required in Section 1909.3 of the IBC.

3.1.2 Where cellulose fibers are used to help reduce shrinkage and temperature cracking in structural plain concrete slabs on grade, the fibers are used in addition to joints required in Section 1909.3 of the IBC.

3.1.3 Cellulose fibers used in concrete over steel deck construction. Refer to Section 4.9.

3.1.4 Cellulose fibers used in fire-resistive concrete over steel deck construction. Refer to Section 4.10.

3.2 Test Requirements:

3.2.1 For recognition under Section 3.1.1, results of tests conducted in accordance with Sections 4.1 through 4.6, inclusive, are required.

3.2.2 For recognition under Section 3.1.2, results of tests conducted in accordance with Sections 4.1 through 4.7, inclusive, are required.

3.2.3 For recognition under Section 3.1.3, results of tests conducted in accordance with Sections 4.1 to 4.9, inclusive, are required. For noncomposite concrete placement over steel deck, compliance with Section 4.9 may be omitted.

3.2.4 For recognition under Section 3.1.4, results of tests conducted in accordance with Sections 4.1 to 4.10, inclusive, are required. For noncomposite concrete placement over steel deck, compliance with Section 4.9 may be omitted.

4.0 TEST METHODS

All tests shall be conducted using appropriate sections of the reference mix outlined in Sections 11 through 15 of ASTM C 494.

4.1 Concrete Flexural Strength: Purpose of the test is to evaluate whether the addition of cellulose fibers to a concrete mix adversely affects the flexural strength of concrete.

4.1.1 Comparative tests shall be conducted in accordance with ASTM C 78.

4.1.2 Sampling and conditioning shall comply with ASTM C 31 and ASTM C 192 as referenced in Section 7.2 of ASTM C 1018.

4.1.3 Tests shall be conducted on three specimens with proprietary fibers in the concrete mix and three specimens without fibers (control).

4.1.4 Conditions of Acceptance: The average flexural strength of the three specimens with fibers shall be at least equal to the average flexural strength of the control specimens, at 28 days. Slight deviations, due to variations in testing, may be considered.

4.2 Concrete Compressive Strength: Purpose of the test is to evaluate whether the addition of cellulose fibers to a concrete mix adversely affects the compressive strength.

4.2.1 Comparative tests shall be conducted in accordance with ASTM C 39.

4.2.2 Tests shall be conducted on three concrete specimens with proprietary fibers and three specimens without fibers (control).

4.2.3 Conditions of Acceptance:

4.2.3.1 The average compressive strength of the three specimens with the fibers shall be at least equal to the average compressive strength of the control specimens at 28 days. Slight deviations, due to variations in testing, may be considered.

4.3 Freeze-thaw Durability: Purpose of the test is to evaluate whether the addition of cellulose fibers to a concrete mix adversely affects the freeze-thaw durability of the concrete.

4.3.1 Comparative tests shall be conducted in accordance with Procedure A of ASTM C 666.

4.3.2 Tests shall be conducted on three concrete specimens with proprietary fibers and three specimens without fibers (control). Air content of each mixture shall be as specified in Section 12.2.2 of ASTM C 494.

4.3.3 Conditions of Acceptance: The average durability factor of the three specimens containing the fibers shall be at least equal to the average durability factor of the control specimens. The number of cycles should be 300 or until the average relative dynamic modulus of elasticity (MOE) of the fiber specimens or the control specimens reaches 60 percent of the respective initial modulus, whichever occurs first.

4.3.4 In lieu of providing test information in accordance with ASTM C 666, a proven record of freeze-thaw performance in accordance with Section 21.4 of ASTM C 1116 may be provided. The field test report shall be prepared by a recognized independent agency, and include the size, quantity, trade name and type of fiber along with the concrete mix design. Test reports from at least three separate locations are required.

4.4 Effect on Reinforcement Bond Strength: (May be omitted if use of fibers is limited to plain concrete slabs on grade.) Purpose of the test is to determine whether the addition of cellulose fibers to a concrete mix adversely affects the bond strength between the reinforcement and concrete.

4.4.1 Comparative tests shall be conducted in accordance with ASTM C 234. Steel reinforcement shall be evaluated horizontally in accordance with Section 4.3 of ASTM C 234. Concrete shall be cured a minimum of 28 days.

4.4.2 Tests shall be conducted on three concrete specimens with cellulose fibers and three specimens without fibers (control).

4.4.3 Conditions of Acceptance: The average bond strength for the steel reinforcement embedded in the concrete with the fibers shall be equal to or exceed the average bond strength for the steel reinforcement embedded in the control specimen. Slight deviations, due to variations in testing, may be considered.

4.5 Plastic Shrinkage Cracking: Purpose of the test is to show that cellulose fibers decrease the plastic shrinkage cracking of concrete. Test must be conducted in accordance with Annex A. Conditions of acceptance are noted in Annex A.

4.6 Compatibility with Concrete: The purpose of the test is to evaluate the long-term resistance of the cellulose fiber to deterioration when in contact with moisture and alkalis present in cement paste or the substances present in air-entraining and chemical admixtures.

4.6.1 Alkaline Stability Test Procedure: This test is conducted in accordance with ASTM D 6942.

4.6.2 Test Conditions: ASTM D 6942 shall be run at time intervals of 1, 3, 7, 14, 21, 28 and 35 days, treating the fibers with saturated calcium hydroxide and 1N sodium hydroxide in open containers. For each sample, the zero-span tensile value shall be the average from testing eight strips cut from four handsheets.

4.6.3 Conditions of Acceptance: The Average Zero-Span Stability Ratio (ZSSR) reported from ASTM D 6942 shall not fall below 90 percent for both alkali environments tested.

4.7 Post-crack Integrity:

4.7.1 General: The Impact test is used to evaluate the integrity of concrete with cellulose fibers after cracking:

4.7.2 Impact Resistance: This test compares the impact resistance of concrete with and without cellulose fibers. The test must be conducted in accordance with the procedure outlined in Annex B.

4.7.3 Conditions of Acceptance: The number of blows to ultimate failure for fiber concrete specimens shall exceed the blows to plain concrete specimens by 40 percent at seven days and 40 percent at 28 days.

4.8 Noncombustible Building Material (Optional):

4.8.1 General: Concrete with virgin cellulose fibers used in building construction required to be noncombustible in accordance with the applicable code shall be tested in accordance with ASTM E 136.

4.8.2 Conditions of Acceptance: The specimens of concrete with virgin cellulose fibers shall satisfy the requirements set forth in ASTM E 136.

4.9 Concrete over Steel Deck Composite Construction Test:

4.9.1 General: The purpose of the tests is to evaluate whether the addition of fibers to a concrete mix

placed over steel deck adversely affects the shear bond between the concrete and steel deck construction.

Results of full-scale superimposed load tests providing comparative load capacity and deflection information, shall be submitted. A minimum of two decks for each reinforcement method shall be tested. Consideration shall be given to the volume, type and size of fibers used. Testing shall be conducted using No. 20 gage [0.0359 inch (0.91 mm)] steel deck (ASTM A 653 Structural Grade 33), 3 inches (76 mm) deep with 12-inch (304.8 mm) rib spacing, designed for composite use and filled with $2^1/_2$ inches (63.5 mm) of concrete fill having a specified compressive strength of 3,000 psi (20.7 MPa). Specimens shall include:

1. One set of specimens shall contain concrete fill with 6 x 6-W1.4 x W1.4 (WWF), 1 inch (25.4 mm) below the top of the slab.

2. One set of specimens shall contain concrete fill with cellulose fibers.

4.9.2 Test Procedure: Concrete with virgin cellulose fibers used in composite steel deck construction shall be evaluated in accordance with one of the following procedures:

4.9.2.1 Testing and conditions of acceptance in accordance with Section 4.8.2 of AC32.

4.9.2.2 Testing and evaluation of test results in accordance with Section 3.2 of ANSI/ASCE 3-91.

4.10 Fire-resistance-rated Construction Test:

4.10.1 The purpose of the test is to evaluate whether the addition of the virgin cellulose fibers in a concrete mix will adversely affect the fire-resistance-rating of concrete-filled steel deck assemblies.

Consideration shall be given to the volume ratio, type and size of fiber used.

Testing shall be conducted in accordance with ASTM E 119, UL 263 (UBC Standard 7-1).

4.10.2 Conditions of Acceptance: The conditions of acceptance shall be in accordance with ASTM E 119, UL 263 (UBC Standard 7-1). The assembly shall be rated for a minimum of 1 hour. The fire-resistance-rated assembly shall be detailed in the evaluation report.

5.0 QUALITY CONTROL

5.1 Quality documentation complying with the ICC-ES Acceptance Criteria for Quality Documentation (AC10) shall be submitted.

5.2 Third-party follow-up inspections are not required under this acceptance criteria.

5.3 The quality documentation shall identify that the cellulose fibers are original natural fibers, “virgin.” Also refer to section 1.4.6.

6.0 EVALUATION REPORT RECOGNITION

6.1 If the applicant/holder of an evaluation report purchases the fibers from a fiber manufacturer, evidence is needed of an agreement between the fiber manufacturer and the applicant/holder indicating that the manufacturer will inform the applicant/holder of any changes to the fiber. The applicant/holder shall then notify ICC-ES.

6.2 The evaluation report shall include the condition that use of the fibers is approved by the project engineer or architect.

6.3 For structural plain concrete, the evaluation report shall indicate that control joints, as required by Section 1909.3 of the IBC, are to be provided.

6.4 For reinforced concrete, the evaluation report must indicate that structural reinforcement and shrinkage and temperature reinforcement in accordance with Section 1907.12 of the IBC are to be provided.

6.5 A batch ticket, signed by a ready-mix representative, shall be available to the code official upon request. The delivery ticket shall include, in addition to the items noted in Section 16.1 of ASTM C 94, the type and amount of fibers added to the concrete mix.

6.6 If recognition for other types of concrete, such as lightweight, is desired, results of tests conducted in accordance with this criteria shall be submitted for each type. ■

TABLE 1—ASTM STANDARDS EDITIONS CITED IN APPLICABLE CODES

ASTM STANDARD	DATE OF STANDARD						
	2009 IBC	2006 IBC	2009 IRC	2006 IRC	BNBC	SBC	UBC
C 31	-06	-98	-	-03a	-98	-91	-91
C 39	-	-96	-	-03	-96	-93a	-93a
C 94	-07	-04	-07	-04	-98b	-94	-94
C 172	-04	-04	-	-04	-97	-90	-90
C 192	-	-02	-	-02	90a	-90a	-90a
D 1557	-02e01	-02	-	-02	91	-91	-91
E 119	-07	-00	-07	-00	–98	-95a	-83 (UBC 7-1)
E 136	-04	-99e1	-04	-99e01	-98e1	-94a	-79 (UBC 2-1)

ANNEX A
TEST METHOD FOR EVALUATING PLASTIC SHRINKAGE CRACKING OR RESTRAINED CONCRETE WITH CELLULOSE FIBERS

A1.0 INTRODUCTION

This test method compares the surface cracking of a concrete panel containing cellulose fiber with the surface cracking of a control concrete panel without fibers. Both concretes are subjected to prescribed conditions of moisture loss severe enough to produce cracking. Both concretes can also be subjected to anticipated job conditions of temperature and humidity to obtain the difference between the cracking potentials of plain concrete and concrete with cellulose fibers in the field.

Shrinkage cracking is quantified by computing the area of surface cracks in each panel specimen to obtain a value in square inches, which represents the assumed total area of crack opening on the surface of the concrete panels.

The effect of fibers on the development of shrinkage cracking is determined by expressing the cracking value for the concrete with cellulose fibers as a percentage of the value for the control concrete (without fibers) when subjected to the identical and simultaneous drying conditions.

Values of shrinkage cracking stated in square inches are regarded as the standard. This method attempts to control or duplicate atmospheric variables to quantify the performance of the fiber variable in a given concrete mixture. Since many other variables such as cement fineness, aggregate gradation and surface finishes also influence cracking potential and cannot be precisely duplicated, this method may not be suitable for interlaboratory evaluations.

A2.0 SUMMARY OF METHOD

Following casting and screeding, the surfaces of concrete test panels with and without fibers are subjected to airflow produced by a fan or fans. The use of a fan box is a method for producing a uniform airflow over the panel surface (see Figure A1). A clear cover over the specimen in conjunction with the fan box will aid in obtaining uniform airflow and allow for specimen observation.

The test is conducted using a method shown in Figure A1, by exposing the panels to an evaporation rate of 0.2 pound of water per square foot of surface per hour (0.975 kg/m^2/h) or more. (See ACI 305.)

Referring to the evaporation graph in ACI 305R, evaporative variables are set in the laboratory for the comparison test to obtain a minimum of the critical rate, i.e., 0.2 pound of water per square foot of surface per hour (0.975 kg/m^2/h). The evaporation rate is monitored by a 1-square-foot (0.0929 m^2) pan of water that is weighed initially and thereafter periodically until the termination of the test to determine the evaporation rate (Annex Note 1).

Annex Note 1: A principal determinant in this method is evaporative water loss that is controlled by the atmospheric environment of the test specimens. Since the concrete specimens will not always provide the same rate of free water evaporation as is available from the pan of water, the rate of evaporation from the pan of water is the standard for this test.

The drying conditions are intended to induce shrinkage in cracking which will occur due to internal or external restraints on volume reduction. End of test shall be determined when final set of the concrete is reached. Final set will be determined according to ASTM C 403.

The specimens should be uncovered and exposed to the same conditions. The total area of crack opening at the end of the test is computed for each test panel. The shrinkage of the concrete is expressed as the total area of crack opening for the panel in square inches.

During the setting stage, from initial through final set, “plastic” shrinkage cracks occur. Because it is difficult to measure cracks in the plastic state, all cracks are measured after the termination of the test period.

The test specimens and monitoring pan are inserted into an environmental chamber designed for this purpose (see Figures A1 and A2). The atmospheric variables set, achieve the minimum prescribed evaporation rate, are not critical in the comparison test because the average evaporative rate is the determining factor of the test.

Before casting of the concrete panels, it is expeditious to check the atmospheric variables in the laboratory test facility to determine that the necessary conditions can be achieved.

Cracking values are determined by counting the number of cracks in each panel and recording the approximate length and width of each crack. The accumulated crack area is computed based on these measurements to determine the cracking value for each test panel. The ratio of the cracking values for fiber reinforced versus control panels is the fiber effectiveness ratio expressed as a percentage. Refer to Section A6.0, Quantification of Cracking.

A3.0 APPARATUS

Molds: A mold with a depth of 4 inches (102 mm), a minimum surface area of 1.75 square feet (0.16 m^2) and rectangular dimensions of 14 inches by 22 inches (356 mm by 559 mm), with internal restraint and stress risers as shown in the figure. The mold may be fabricated from metal, plastic or plyform (Annex Note 2). Fabricate the internal restraints and stress riser for a separate sheet metal piece. This sheet metal piece shall seat snugly at the bottom of the mold (see Figure A2).

Annex Note 2: The use of plyform, with very little absorption, is appropriate for constructing lightweight, stiff molds.

Restraint: Two 1.25-inch (31.7 mm) risers, placed 4 inches (102 mm) inward from each end of the mold, provide restraint to the concrete. The center 2.5-inch (63.5 mm) stress riser serves as an initiation point for plastic shrinkage cracking.

The sheet metal stress riser insert is lightly oiled to provide appropriate debonding of the concrete from the bottom of the sheet. The insert is considered to be properly oiled when the entire surface is coated and all excess oil has been removed. The sides of the mold are oiled in the same manner as the insert.

Fan(s): Adjustable-speed fan(s) capable of achieving a minimum 10 mph (16.1 km/h) airflow over the entire test specimen surface area.

Sensors: Temperature, humidity, air velocity sensor means of recording ambient air and concrete temperatures to the nearest 1°F (0.5°C) and relative humidity to the nearest 1 percent near the test specimen surface during testing. An anemometer capable of measuring air velocity to the nearest 1 mph (1.61 km/h) shall be used.

Vibrating Platform: Any device that can fully consolidate the test panels within 12 seconds and that meets minimum frequency requirements for an external vibrator is suitable.

Monitoring Pan: A pan suitable for holding water in the air stream between the concrete test panels. The sides of the pan shall be vertical and shall expose precisely 1 square foot (0.0929 m^2) of water ±1 percent to the atmosphere. This size of pan will expedite the calculation of evaporation rate. The exposed lip of the pan shall not extend more than $^1/_8$ inch (3.2 mm) above the water level at the start of the test. A 12-inch-by-

12-inch-by-1-inch (305 mm by 305 mm by 25 mm) or 8-inch-by-18-inch-by-1-inch (203 mm by 457 mm by 25 mm) configuration is appropriate.

Scale: A balance or scale for weighing the monitoring pan shall have a capacity of at least 5 pounds (2.2 kg) and accurate to within 0.1 percent of its capacity.

Optional: A scale for weighing the test panels shall have a capacity of at least 200 pounds (90.7 kg) and accurate to within 1 percent of the test load.

A4.0 SAMPLING, TEST SPECIMENS AND TEST UNITS

General Requirements: The preferred specimen depth for concrete is 4 inches (102 mm). Maximum coarse aggregate size when using stress risers is $^3/_4$ inch (19 mm).

Test Specimens: The specimens are cast in the laboratory in accordance with the applicable provisions of ASTM C 192.

Test Units: A test unit is at least six test specimens. Three are control specimens without fibers. The other specimens are identical except they contain specified amounts and types of fiber. Control concrete specimens may be compared to more than one series of fiber-reinforced concrete specimens.

A5.0 PROCEDURE

The molds are filled with concrete and subjected to a source of external vibration until the concrete is consolidated and approximately level with the top of the mold. Each specimen is then screeded three times with an angle iron screed. The total vibration time is limited to 12 seconds, to avoid material segregation.

Optional: The molds are weighed prior to filling the concrete. Following removal of any waste concrete adhering to the outside of the mold, each specimen while in the mold is weighed prior to testing so that evaporation in the form of water loss during testing may be determined at the end of the test by subsequent weighing.

After vibration and screeding, the surface of the concrete is floated with a magnesium float to embed the aggregate and compact the surface. The number of passes shall be determined for each mixture and material source used during testing. Float specimens of the same mixture and material using equal number of passes.

The fiber reinforced and control specimens are placed in the selected exposure area downstream from the fan(s). (See arrangement in Figure A1.)

The fan(s), preset to achieve a minimum airflow velocity of 10 mph (16.1 km/h) are turned on, and the time of day is recorded. Simultaneously, the specimens are exposed to identical drying conditions. The evaluation of cracking commences at this time.

Air and concrete temperatures, relative humidity and airflow velocity, at a location 4 inches (102 mm) above the specimen, are recorded at the start and at 30 minute intervals. The time at which cracking is first observed is also recorded for each specimen.

Observations are continued at 30-minute intervals until final set or for a minimum of three hours. Measurement of cracking commences only at the completion of the drying period.

The evaporation rate is determined by initially weighing the full monitoring pan at the start of the test and at 30-minute intervals thereafter. The weight loss in pounds is recorded to the nearest 0.01 pound (4.53 g) at each weighing in the air stream to prevent an interruption in evaporation losses.

Annex Note 3: Adjustments should be made if necessary to maintain the standard evaporation rate at the prescribed level. It is suggested that the monitoring pan be placed on a scale in the air stream for continuous monitoring without periodic removal during testing.

After final set, or a minimum of three hours under the test conditions, atmospheric variables are recorded, and the fans are stopped, the total water loss from the monitoring pan is determined. The test is not valid if the total standard evaporation rate was less than 0.2 pound of water per square foot of surface per hour (0.975 $kg/m^2/h$).

Optional: If mass loss of test panels is desired, test panels are weighed at this time.

A6.0 QUANTIFICATION OF CRACKING

Cracks are quantified by computing the crack opening area at the surface of the panels. The unit of measurement is square inches (mm^2).

Measurement of cracks commences after the end of drying. Each crack is identified and measured in a progressive order from one side of the panel to the other. As each crack is measured, it shall be identified with a bright, felt-tipped pen to prevent duplication. The approximate length of a crack is determined by laying a string along its length and subsequently recording the straight-line distance of string from end to end. It is important to use the same care and measuring methodology on each specimen. Average crack width is computed by recording and averaging widths measured along the crack at a minimum of 1-inch (25.4 mm) intervals (Annex Note 4). When all measurements have been taken and all cracks have been marked, this step is complete.

Annex Note 4: A crack comparator or crack microscope available from many sources is required to determine the width of the cracks.

It is very important to use the same care and measuring methodology on each specimen. The cracking values of each panel are computed by multiplying crack lengths by their associated average widths and accumulating these products to determine the specimen's total cracking value.

A7.0 CONDITIONS OF ACCEPTANCE

The results should be evaluated on the basis of averaging the test results and any peculiar individual test results should be noted.

The minimum accepted for the final results should be that cellulose fibers decrease the plastic shrinkage cracking of concrete by 40 percent.

A8.0 REPORT

The report shall include the following:

- Concrete strength, unit weight, and the amount of air entrainment (if applicable).
- The amount in lb./yd^3 (kg/m^3) of water, aggregates with aggregate gradation and fibers; admixture in fluid oz./yd^3 (mL/m^3); water-cement ratio and slump for each concrete mixture evaluated.
- The fiber volume percentage (%) and type of fiber in each concrete mixture evaluated.
- Depth and dimensions of specimens.
- Cracking value of each specimen determined in square inches (mm^2).
- Total the measured rate of moisture loss in pounds per square foot (kg/m^2).
- Cracking ratio relative to control without fibers:

Cracking value (FRC)/Cracking value (control) X 100%

- Mass loss of specimens (optional)
- Calculated moisture loss of each panel in pounds of water per square foot (kg/m^2) of surface (optional).

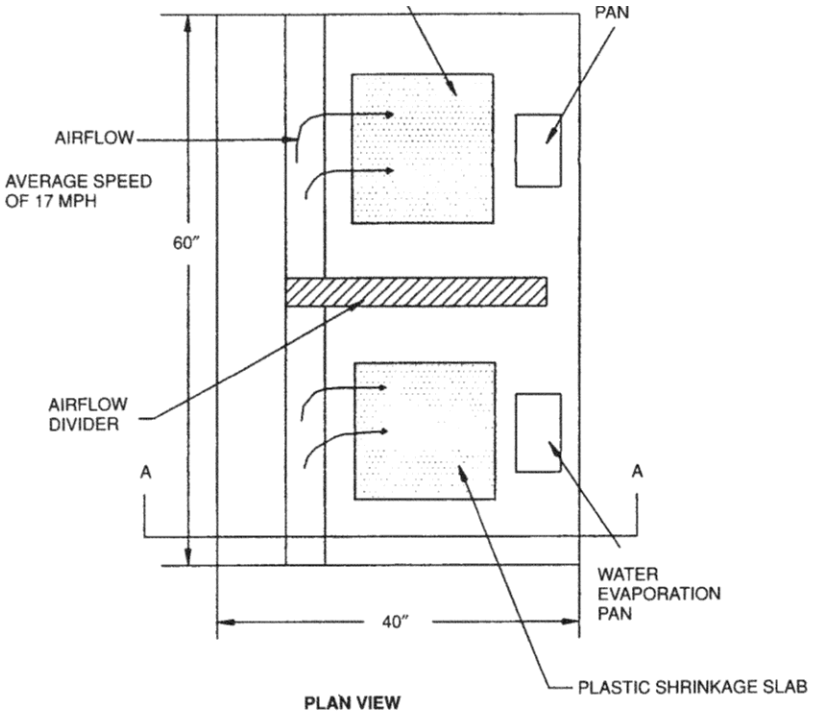

PLAN VIEW

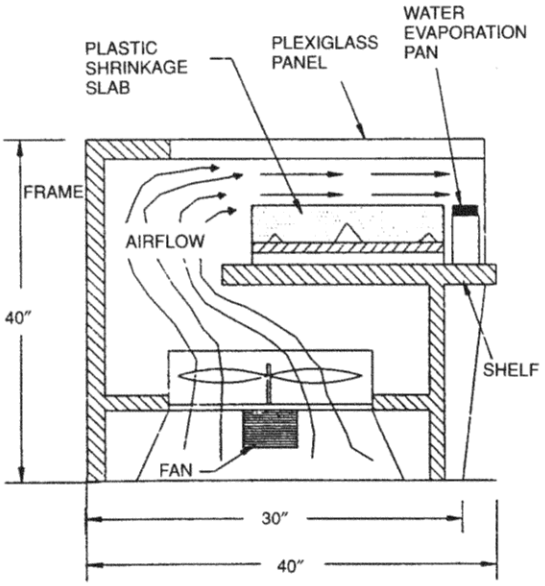

SECTION A-A

(FIGURE NOT TO SCALE)

For **SI:** 1 inch = 25.4 mm.

FIGURE A1—SCHEMATIC OF FAN BOX USED WITH PLASTIC SHRINKAGE SLAB TO TEST FIBERS

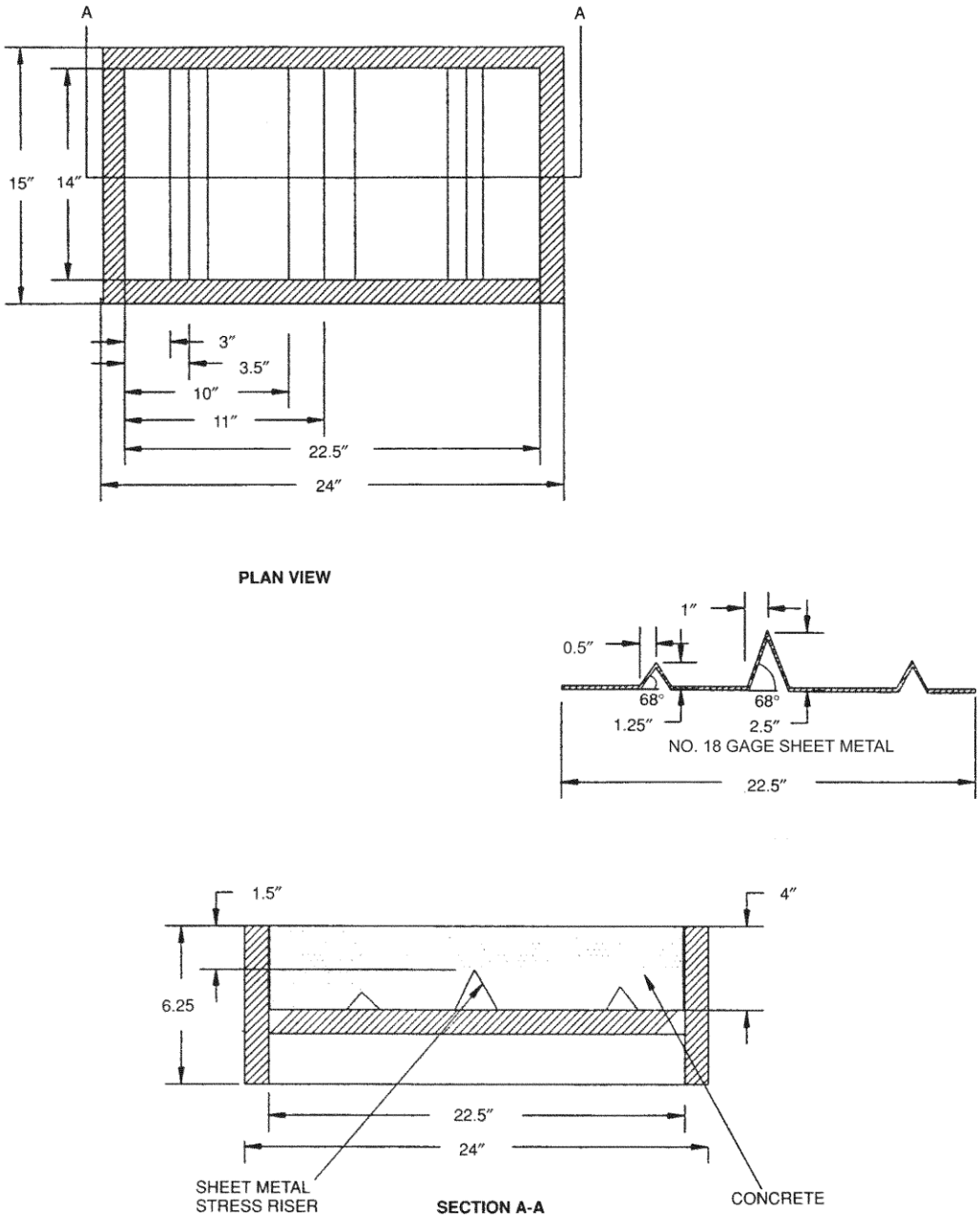

(FIGURE NOT TO SCALE)

For **SI:** 1 inch = 25.4 mm.

FIGURE A2—SCHEMATIC OF PLASTIC SHRINKAGE MOLD USED FOR FIBER TESTS

ANNEX B
TEST METHOD FOR EVALUATING IMPACT RESISTANCE OF CONCRETE WITH CELLULOSE FIBERS

B1.0 SCOPE

The test method compares the impact resistance of concrete with and without cellulose fibers. Impact resistance is characterized by the measure of: (a) the energy consumed to fracture a specimen; (b) the number of blows in a “repeated impact” test to achieve a prescribed level of distress, and (c) the extent of damage.

B2.0 APPARATUS

The equipment for the drop weight impact test consists of:

B2.1 A standard, manually or mechanically operated 10-pound (4.54 kg) compaction hammer with an 18 inches (457 mm) drop as specified in ASTM D 698 or ASTM D 1557.

B2.2 A $2^1/_2$-inch-diameter (63.5 mm) hardened steel ball.

B2.3 A flat base plate with four lugs welded to it (refer to Figures B1 and B2).

B2.4 Molds to cast 6-inch-diameter (152 mm) by $2^1/_2$-inch (63.5 mm) $\pm^1/_8$-inch (±3 mm) concrete specimens. This is accomplished with molds complying with ASTM C 31 or C 470.

B3.0 TEST PROCEDURE

The $2^1/_2$-inch-thick-by-6-inch-diameter (63.5 mm by 152 mm) concrete samples are prepared using external vibration. The method, frequency, amplitude and time of vibration shall be recorded. Test specimens of $2^1/_2$ inch (63.5mm) thickness are cast in a single layer to avoid fiber orientation and fiber-free planes. The molds are filled partially to the $2^1/_2$-inch (63.5 mm) depth and float finished.

The specimens are tested at 7 and 28 days of age. Specimen thickness is recorded to the nearest $^1/_{16}$ inch (1.6 mm). The reported thickness is determined by averaging the measured thickness at the center and each edge of the specimen along any diameter across the top surface. The samples are coated on the bottom with a thin layer of petroleum jelly or a heavy grease and placed on the base plate within the positioning lugs with the finished face up. The base plate shall be bolted to a rigid base such as a concrete floor or cast concrete block. The hardened steel ball is placed on top of the specimen within the bracket. Foamed elastomer pieces are placed between the specimen and positioning lugs to restrict movement of the specimen during testing to first visible crack.

The drop hammer is placed with its base upon the steel ball and held there with enough down pressure to keep it from bouncing off the ball during the test. The hammer is repeatedly dropped 18 inches (457 mm), and the number of blows required to cause the first visible crack on the top and to cause ultimate failure are both recorded. The foam elastomer is removed after the first visible crack is observed. Ultimate failure occurs when the test specimen comes in contact with three of the four lugs welded to the base plate. Illustrative details are in Figures B1 and B2.

B4.0 SAMPLING, TEST SPECIMENS AND TEST UNITS

B4.1 Sampling: Five specimens are molded for each test age and test condition. Specimens involving a given variable can be made on any given day. When it is possible to make at least one specimen for each variable on a given day, the mixing of the entire series of specimens must be completed in as few days as possible, and one of the mixtures must be repeated each day as a standard comparison.

B4.2 Test Specimens: The test specimens are cast in accordance with ASTM C 192, the Standard Method for Making and Curing Concrete Test Specimens in the Laboratory.

B4.3 Test Units: A test unit is at least five test specimens of each variation. One unit is the control concrete without fibers. The other units are the same concrete mixture with specified amounts and types of fiber.

B5.0 CONDITIONS OF ACCEPTANCE

The results are evaluated on the basis of averaging the test results. Any individual peculiarities among test results shall be noted. The minimum acceptance for the final results is that the cellulose fibers increased the impact of concrete by 40 percent at 7 days and 40 percent at 28 days.

B6.0 REPORT

In addition to the requirements of AC85, the report shall include the following:

- The concrete design mix for all variations.
- Fiber dosage for each set of specimens, by weight.
- Fiber length for each of set specimens.
- Thickness and dimension of specimen.
- Height of hammer drop.
- Number of blows to first visible crack.
- Number of blows to ultimate failure.

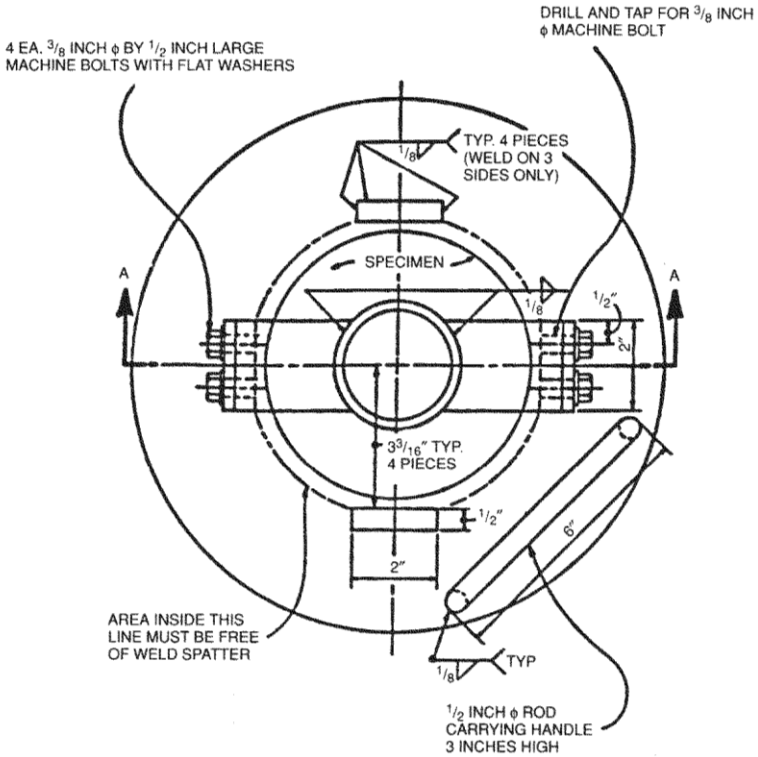

For **SI:** 1 inch = 25.4 mm.

FIGURE B1—PLAN VIEW OF TEST DEVICE

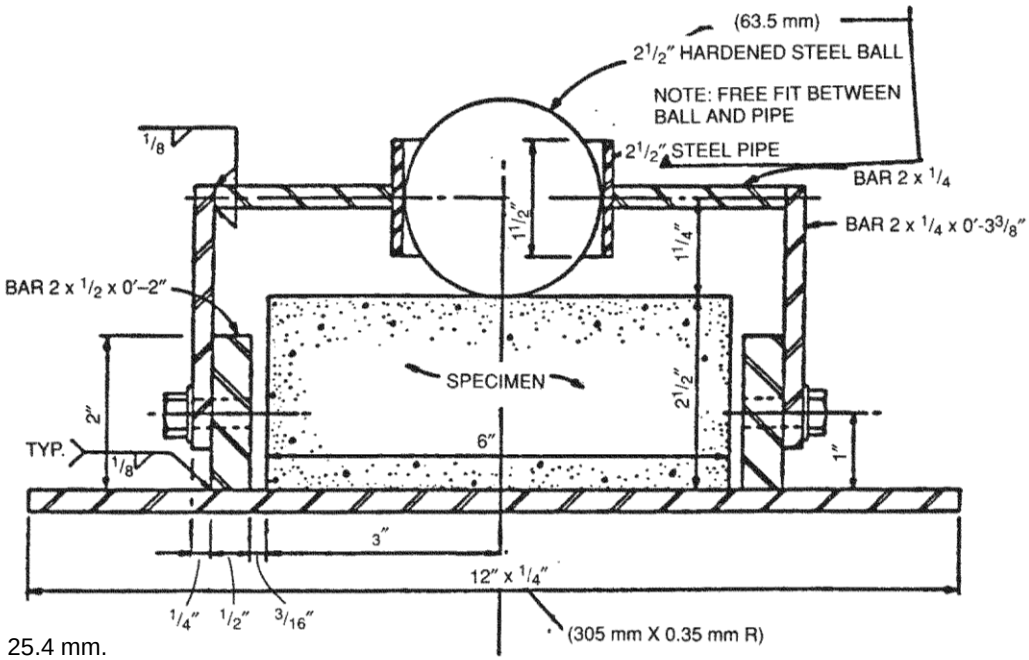

For **SI:** 1 inch = 25.4 mm.

FIGURE B2—SECTIONAL VIEW A-A OF TEST DEVICE