ICC EVALUATION SERVICE

Most Widely Accepted and Trusted

ICC-ES Report

ICC-ES | (800) 423-6587 | (562) 699-0543 | www.icc-es.org

ESR-1711

Reissued 06/2015
This report is subject to renewal 06/2017.

DIVISION: 09 00 00—FINISHES
SECTION: 09 24 00—PORTLAND CEMENT PLASTERING

REPORT HOLDER:

KWIK KOTE CORPORATION

4001 WEST INDIAN SCHOOL ROAD
PHOENIX, ARIZONA 85019

EVALUATION SUBJECT:

KWIK KOTE ONE-COAT STUCCO SYSTEMS

Look for the trusted marks of Conformity!

"2014 Recipient of Prestigious Western States Seismic Policy Council (WSSPC) Award in Excellence"

A Subsidiary of INTERNATIONAL CODE COUNCIL

ICC-ES Evaluation Reports are not to be construed as representing aesthetics or any other attributes not specifically addressed, nor are they to be construed as an endorsement of the subject of the report or a recommendation for its use. There is no warranty by ICC Evaluation Service, LLC, express or implied, as to any finding or other matter in this report, or as to any product covered by the report.

Copyright © 2015

ICC-ES Evaluation Report

ESR-1711

Reissued June 2015

This report is subject to renewal June 2017.

www.icc-es.org | (800) 423-6587 | (562) 699-0543 *A Subsidiary of the International Code Council®*

DIVISION: 09 00 00—FINISHES
Section: 09 24 00—Portland Cement Plastering

REPORT HOLDER:

KWIK KOTE CORPORATION
4001 WEST INDIAN SCHOOL ROAD
PHOENIX, ARIZONA 85019

EVALUATION SUBJECT:

KWIK KOTE ONE-COAT STUCCO SYSTEMS

1.0 EVALUATION SCOPE

Compliance with the following codes:

- 2009 and 2006 *International Building Code*® (IBC)
- 2009 and 2006 *International Residential Code*® (IRC)
- 1997 *Uniform Building Code*™ (UBC)
- 2013 *Abu Dhabi International Building Code* (ADIBC)†

†The ADIBC is based on the 2009 IBC. 2009 IBC code sections referenced in this report are the same sections in the ADIBC.

Properties evaluated:

- Structural
- Durability
- Fire-resistance-rated construction
- Types I through IV (noncombustible construction)

2.0 USES

The Kwik Kote one-coat stucco systems are cementitious exterior wall covering systems installed on exterior walls of wood or steel frame, concrete or concrete masonry construction. The systems are alternatives to exterior wall coverings specified in IBC Chapter 25 and IRC Section R703 and UBC Chapter 25. The systems may be used to construct one-hour fire-resistance-rated wall assemblies, and Types I, II, III and IV (noncombustible) wall assemblies, when installed in accordance with Sections 4.4 and 4.5, respectively.

3.0 DESCRIPTION

3.1 General:

The Kwik Kote one-coat stucco systems are exterior cementitious coatings consisting of proprietary mixtures of portland cement, sand, fibers and proprietary ingredients, mixed with water, that are reinforced with wire fabric or metal lath and applied over substrates of expanded polystyrene (EPS), extruded polystyrene (XPS) or polyisocyanurate insulation board, fiberboard, plywood, oriented strand board (OSB), gypsum sheathing, masonry or concrete. The systems may be installed on exterior walls of wood-framed, steel-framed, masonry or concrete construction.

3.2 Material:

3.2.1 Kwik Kote One-Coat Stucco: The Kwik Kote one-coat stucco is available in five different blends: "Kwik Kote One Coat Stucco Premix," "Kwik Kote Dry," "Kwik Kote Enhanced I", "Kwik Kote Enhanced II" and "Kwik Kote Enhanced III." Each blend is a factory-prepared mixture of Type I or II portland cement complying with ASTM C 150; fibers; and proprietary additives. Each blend is packaged in 80-pound (36 kg) bags. Four and one-half to six gallons (17.0 to 22.7 L) of water and 200 to 250 pounds (91 to 113 kg) of sand, complying with Section 3.2.2, must be added to each bag in the field, and must be mixed in accordance with the manufacturer's recommendations. Optional inorganic coloring agents may be added in the field in accordance with Kwik Kote Corporation's published installation instructions.

3.2.2 Sand: The sand must be clean and free from deleterious amounts of loam, clay, silt, soluble salts and organic matter. Sampling and testing must comply with ASTM C 144 or C 897. Sand must be graded in accordance with ASTM C 144 or C 897 within the limits shown in the following table:

RETAINED ON U.S. STANDARD SIEVE	PERCENT RETAINED BY WEIGHT ± 2 PERCENT	
	Minimum	Maximum
No. 4 (7.6 mm)	—	0
No. 8 (2.4 mm)	0	10
No. 16 (1.2 mm)	10	40
No. 30 (600 Φm)	30	65
No. 50 (300 Φm)	70	90
No. 100 (150 Φm)	95	100

3.2.3 Insulation Board:

3.2.3.1 EPS Insulation Board: EPS board must have a nominal density of 1.5 pounds per cubic foot (24 kg/m^3), a flame-spread index of 25 or less and a smoke-developed index of not more than 450 when tested in accordance with ASTM E 84 or UL 790 (UBC Standard 8-1), and must comply with ASTM C 578 as Type II. All boards must be recognized in a current ICC-ES evaluation report. See Section 7.2 for board identification requirements.

Boards installed without sheathing, over open framing, must have a thickness ranging from 1 inch to 1$^1/_2$ inches (25 to 38 mm) and have $^3/_8$-inch-high (9.5 mm) tongues with compatible grooves for horizontal joints. See Figure A

ICC-ES Evaluation Reports are not to be construed as representing aesthetics or any other attributes not specifically addressed, nor are they to be construed as an endorsement of the subject of the report or a recommendation for its use. There is no warranty by ICC Evaluation Service, LLC, express or implied, as to any finding or other matter in this report, or as to any product covered by the report.

Copyright © 2015

for joint detail. Over solid substrates, square-edge foam plastic boards, complying with ASTM C 578 as Type I, with minimum $^1/_2$-inch (12.7 mm) thickness and a minimum nominal density of 1 pcf (16 kg/m^3), may be used, except when installation of the foam plastic is a part of the water-resistive barrier over wood-based sheathing described in Section 3.2.9.1, which requires 1-inch-thick (25.4 mm) EPS boards with tongue-and-groove edges.

When installation is over solid substrates, as described in Section 4.3, the boards must have minimum $^1/_4$-inch-wide-by-$^1/_8$-inch-deep (6.4 mm by 3.2 mm) vertical grooves spaced a maximum of 12 inches (305 mm) on center on the back face of the boards. As an alternate to the vertical grooves in the foam plastic board, flat-faced boards may be installed over solid substrates provided Tyvek StuccoWrap or Tyvek DrainWrap water-resistive barrier recognized in ESR-2375 is installed behind the boards.

3.2.3.2 XPS Insulation Board: XPS board must have a nominal density of 2.5 pcf (40 kg/m^3) and must comply with ASTM C 578 as Type VII. See Section 3.2.3.1 for other details and requirements.

3.2.3.3 Polyisocyanurate Foam Plastic Board: Polyisocyanurate foam plastic board must comply with ASTM C 1289 as Type II. Polyisocyanurate foam plastic boards must have a nominal density of 2 pcf (32kg/m^3), a flame-spread index of 25 or less, and a smoke-developed index of 450 or less when tested in accordance with ASTM E 84 or UL 790 (UBC Standard 8-1). The foam plastic boards must be 1 inch to 1$^1/_2$ inches (25 to 38 mm) thick, have all square edges installed at horizontal and vertical edges supported by framing or blocking, and be limited to nonfire-resistance-rated and combustible construction. All boards must be recognized in a current ICC-ES evaluation report. See Section 7.2.1 for board identification requirements. Over solid substrates, square-edge foam plastic boards with a minimum thickness of $^1/_2$ inch (12.7 mm) may be used, with the same requirements set forth in Section 3.2.3.1.

3.2.4 Lath:

3.2.4.1 Wire Fabric Lath: Wire fabric lath must comply with the ICC-ES Acceptance Criteria for Metal Plaster Bases (Lath) (AC191) or be recognized in a current ICC-ES evaluation report for use with cementitious exterior wall coverings. Minimum No. 20 gage [0.035 inch (0.89 mm)], 1-inch galvanized steel, woven-wire fabric must be used. Lath must be furred when applied over all substrates except unbacked foam plastic insulation board. Furring must comply with the following requirements:

1. When maximum total coating thickness is $^1/_2$ inch (12.7 mm) or less, the body of the lath must be furred a minimum of $^1/_8$ inch (3.2 mm) from the substrate after lath installation.
2. When total coating thickness is greater than $^1/_2$ inch (12.7 mm), No. 17 gage [0.058 inch (1.47 mm)] by 1$^1/_2$-inch (38 mm) woven-wire fabric lath must be used. The body of the lath must be furred a minimum of $^1/_4$ inch (6.4 mm) from the substrate after lath installation.

3.2.4.2 Metal Lath: Metal lath must comply with AC191 and, when applicable, UBC Table 25-B. Furring requirements are as set forth in Section 3.2.4.1.

3.2.5 Fiberboard: Minimum $^1/_2$-inch-thick (12.7 mm) asphalt-impregnated fiberboard must comply as ASTM C208, Type IV, Grade 1 wall sheathing.

3.2.6 Wood Structural Panel Sheathing: Wood structural panel sheathing must be minimum $^5/_{16}$-inch-thick (7.9 mm), exterior-grade plywood or Exposure 1 OSB for studs spaced 16 inches (406 mm) on center, and minimum $^3/_8$-inch-thick (9.5 mm), exterior-grade plywood or $^7/_{16}$-inch-thick (11.1 mm), Exposure 1 OSB for studs spaced 24 inches (610 mm) on center. Plywood must comply with U.S. Department of Commerce Product Standard PS-1 (UBC Standard 23-2). Oriented strand board (OSB) must comply with U.S. Department of Commerce Product Standard PS-2 (UBC Standard 23-3).

3.2.7 Gypsum Board: Water-resistant core-treated gypsum sheathing must comply with ASTM C 79 or ASTM C 1396. Gypsum wallboard must comply with ASTM C 36 or ASTM C 1396.

3.2.8 Caulking: Caulking material must be either acrylic latex complying with ASTM C 834, or polyurethane, polyurethane modified, polysulfide, or silyl-terminated polyether elastomeric sealants complying with ASTM C 920.

3.2.9 Weather Protection:

3.2.9.1 Water-resistive Barrier: A water-resistive barrier is required and must comply with IBC Section 1404.2 or IRC Section R703.2 or UBC Section 1402.1, as applicable. Minimum No. 15 asphalt-saturated, nonperforated felt complying with the requirements for Type I ASTM D 226; minimum Grade D kraft building paper complying with UBC Standard 14-1; asphalt-saturated rag felt complying with UL Standard 55A (UBC); or material recognized in a current ICC-ES evaluation report as equivalent to ASTM D 226, Type I or better, in a current ICC-ES evaluation report.

When applied over any wood-based sheathing, the barrier must be one of the following:

- A minimum of two layers of Grade D kraft building paper as set forth in IBC Section 2510.6, IRC Section R703.6.3, or UBC Section 2506.4, as applicable; or an equivalent recognized in a current ICC-ES evaluation report.
- One layer of EPS or XPS insulation board, having horizontal tongue-and-groove edges, as described in Section 3.2.3.1, over one layer of Grade D kraft building paper having a minimum water-resistance rating of 60 minutes; or an equivalent recognized in a current ICC-ES evaluation report.

When application is over open framing, Fome-Cor Board, recognized as complying with ICC-ES AC38 and installed in accordance with evaluation report ESR-1614, may be used as the water-resistive barrier.

When Tyvek StuccoWrap or Tyvek DrainWrap is used as the water-resistive barrier, the grooves in the insulation board described in Section 3.2.3.1 are not required. The Tyvek StuccoWrap or Tyvek DrainWrap must be installed in accordance with ESR-2375.

3.2.9.2 Vapor Retarder: Protection against condensation must be provided in accordance with 2009 IBC Section 1405.3 or 2006 IBC Section 1403.2, as applicable. Under the 2009 IRC, a vapor retarder must be provided in accordance with IRC Section R601.3. Under the 2006 IRC, a vapor retarder complying with IRC Section R318.1 must be provided.

3.2.10 Flashing: Flashing complying with 2009 IBC Section 1405.4, 2006 IBC Section 1405.3, IRC Section R703.8, or UBC Section 1404.2, as applicable, must be provided.

3.2.11 Trim and Accessories: All trim, screeds and corner reinforcement must be corrosion-resistant or approved plastic.

4.0 INSTALLATION

4.1 General:

The exterior cementitious coating must be applied by hand-troweling or machine-spraying in one coat or two coats to a minimum $^{3}/_{8}$-inch (9.5 mm) thickness, unless otherwise noted. Nominal thickness around penetrations must be $^{3}/_{8}$ inch (9.5 mm), backed by framing or blocking. For asymmetrical wall assemblies, the nominal minimum coating thickness must be $^{3}/_{8}$ inch (9.5 mm). The lath must be embedded in the minimum coating thickness and must not be exposed. The finish coat, if required, must be applied according to Kwik Kote's recommendations. The coating system must be applied at ambient temperatures ranging from 40°F to 110°F (4.5 to 43.5°C) by applicators approved by Kwik Kote Corporation. An installation card as illustrated in Figure F must be on the jobsite with the name of the applicator and the product to be used, before any water-resistive barrier or exterior sheathing is installed. Also, see Section 5.7.

4.2 Application over Open Framing:

The water-resistive barrier, as described in Section 3.2.9.1, must be applied over open framing spaced a maximum of 24 inches (610 mm) on center. The EPS, XPS or polyisocyanurate board, as described in Section 3.2.3.1, 3.2.3.2 or 3.2.3.3 must be placed horizontally with tongues faced upward, and must be temporarily held in place with galvanized staples or roofing nails. Vertical butt joints must be staggered a minimum of one stud space from adjacent courses and be located directly over studs. The lath must be applied tightly, with $1^{1}/_{2}$-inch (38 mm) end and side laps, over the insulation board and fastened through the insulation board and water-resistive barrier, to wood studs, sills and plates, having a minimum specific gravity of 0.50, at 6 inches (152 mm) on center using No. 11 gage galvanized roofing nails having $^{7}/_{16}$-inch-diameter (11.1 mm) heads, or No. 16 gage galvanized staples having a minimum crown width of $^{7}/_{16}$ inch (11.1 mm). Staples with up to a 1-inch (25.4 mm) crown width may be used provided both legs of the staple engage framing. Minimum fastener penetration must be 1 inch (25.4 mm) into wood framing. Care must be taken to avoid overdriving fasteners.

Wall bracing in accordance with IBC Section 2308.9.3, IRC Section R602.10, or UBC Sections 2320.11.3 and 2320.11.4, as applicable, or an acceptable alternative, must be provided. Outside wall corners and parapet corners must be covered with metal corner reinforcements attached to the framing members with approved fasteners spaced a maximum of 18 inches (457 mm) on center, or as necessary to hold plumb. Weep screeds must comply with, and be installed at the bottom of the wall in accordance with, IBC Section 2512.1.2, IRC Section R703.6.2.1, or UBC Section 2506.5, as applicable. Galvanized steel, $1^{3}/_{8}$-inch-thick (35 mm), No. 22 gage [0.025-inch-thick (0.635 mm)], J-shaped trim pieces must be installed at other areas where insulation board is exposed. See Figures B through E for typical installation details. At windows and doors, butting J-trim metal edges, when installed, must be flashed in accordance with the applicable code. Holes for hose bibbs, electrical panels and other penetrations of substrate surfaces, except those caused by fasteners, must also be flashed in accordance with the applicable code. The coating must then be applied as described in Section 4.1.

Installation of the Kwik Kote stucco system applied over open, minimum No. 20 gage [0.035-inch-thick (0.813 mm)] galvanized steel framing spaced a maximum of 24 inches (610 mm) on center must be the same as for wood studs described in this section (Section 4.2), except the lath must be fastened to framing and tracks with No. 8 gage, corrosion-resistant, self-drilling, waferhead, tapping screws, installed at a maximum of 7 inches (178 mm) on center. Screws must penetrate framing and tracks a minimum of $^{1}/_{4}$ inch (6.4 mm).

4.3 Application over Solid Substrates:

4.3.1 Fiberboard: Minimum $^{1}/_{2}$-inch-thick (12.7 mm) fiberboard sheathing must be installed directly over wood studs or minimum No. 20 gage (0.035-inch-thick [0.889 mm]) steel studs spaced a maximum of 24 inches (610 mm) on center. The fiberboard must be temporarily held in place with corrosion-resistant staples or roofing nails (for wood studs), or self-drilling tapping screws (for steel studs). A water-resistive barrier must be applied over the fiberboard as set forth in Section 3.2.9.1. When the optional insulation board is installed over the water-resistive barrier, the foam plastic boards must have vertical grooves as described in Section 3.2.3, or flat-faced foam plastic boards may be used provided the water-resistive barrier is Tyvek StuccoWrap or Tyvek DrainWrap as described in Section 3.2.9.1. When grooved foam plastic boards are used, the grooves must face the water-resistive barrier and must be aligned vertically, but may be offset a maximum of 6 inches (152 mm) from adjacent boards. The insulation boards must be attached to the framing, but the vertical joints of the insulation boards are not required to align with the framing. The lath must be attached to studs through the sheathing with fasteners and spacing as described for insulation board in Section 4.2; or as described for fiberboard in IBC Table 2304.9.1, IRC Table R602.3(1), or UBC Table 23-II-B-1, as applicable; whichever is more restrictive.

Wall bracing in accordance with IBC Section 2308.9.3, IRC Section R602.10, or UBC Sections 2320.11.3 and 2320.11.4, as applicable, or an acceptable alternate, must be provided. Outside wall corners and parapet corners must be covered with metal corner reinforcements attached to the framing members with approved fasteners spaced 18 inches (457 mm) on center, or as necessary to hold plumb. Weep screeds must comply with, and be installed at the bottom of the wall in accordance with, IBC Section 2512.1.2, IRC Section R703.6.2.1, or UBC Section 2506.5, as applicable. Galvanized steel, $1^{3}/_{8}$-inch-thick (35 mm), No. 22 gage [0.025-inch-thick (0.635 mm)], J-shaped trim pieces must be installed at other areas where insulation board is exposed. See Figures B through E for typical installation details. At windows and doors, butting J-trim metal edges, when installed, must be flashed as described in Section 3.2.10. Holes for hose bibbs, electrical panels and other penetrations of substrate surfaces, except those caused by fasteners, must also be flashed. The coating must then be applied as described in Section 4.1.

4.3.2 Wood Structural Panel Sheathing: Wood structural panel sheathing must be applied directly to wood studs under conditions set forth in Section 3.2.6 and IBC Tables 2304.9.1 and 2308.9.3(3), IRC Table R602.3(3), or UBC Table 23-IV-D-1, as applicable. The sheathing must be attached in accordance with IBC Table 2304.9.1, IRC Table R602.3(1), or UBC Table 23-II-B-1, as applicable. The water-resistive barrier, optional insulation board, wire-fabric lath and coating must be applied as described for fiberboard in Section 4.3.1, except the staples used to

fasten lath must have sufficient length to penetrate a minimum of 1 inch (25.4 mm) into the sheathing and framing. The balance of the system must be installed in accordance with Section 4.2.

4.3.3 Gypsum Sheathing: Minimum $^1/_2$-inch-thick (12.7 mm), water-resistant core-treated gypsum sheathing must be installed directly on wood studs spaced a maximum of 24 inches (610 mm) on center, in a manner similar to fiberboard, as described in Section 4.3.1. Gypsum sheathing must be fastened in accordance with IBC Table 2508.1, IRC Table R702.3.5, or UBC Table 25-G, as applicable.

A water-resistive barrier must be applied over the gypsum sheathing, as set forth in Section 3.2.9.1 before application of lath or optional insulation board. The lath must then be attached to studs through the sheathing, with fasteners and spacing as described for insulation board in Section 4.2. All walls must be braced in accordance with the applicable code. Exposed sheathing edges must be protected. Holes in the substrate surface must be flashed in accordance with the code, and the coating must then be applied as described in Sections 4.1 and 4.2.

The gypsum sheathing, optional foam plastic insulation board, lath and coating may be applied to minimum No. 20 gage [0.035-inch-thick (0.813 mm)] steel studs in the same manner, except the lath fastening is with No. 8 by minimum $1^3/_4$-inch-long (44 mm), self-drilling tapping screws spaced at a maximum of 7 inches (178 mm) on center. Screws fastening sheathing, and screws fastening lath, must be staggered from each other. The screws must penetrate the framing and tracks a minimum of $^1/_4$ inch (6.4 mm).

4.3.4 Concrete and Masonry: Concrete and masonry surface preparation must be in accordance with IBC Section 2510.7 or UBC Section 2508.8, as applicable. Surfaces of masonry, stone, or cast-in-place or precast concrete must be clean and free of dust, oil, or other contaminants. Surfaces must have good absorption and roughness to ensure proper bonding. If the surface is insufficiently rough, a bonding agent must be applied. The coating must be applied directly to the prepared surface at a minimum thickness of $^3/_8$ inch (9.5 mm) in accordance with the applicable provisions of Section 4.1.

4.4 One-hour Fire-resistance-rated Wall Assemblies:

The assemblies described in this section are rated for exposure to fire from both sides, unless otherwise noted.

4.4.1 First Assembly:

4.4.1.1 Interior Face: One layer of minimum $^5/_8$-inch-thick (15.9 mm), Type X gypsum wallboard, water-resistant backerboard or veneer base complying with ASTM C 36 or ASTM C 1396, must be applied vertically or horizontally to the interior face of minimum nominal 2-by-4 wood studs (minimum specific gravity of 0.50, such as Douglas fir) spaced a maximum of 24 inches (610 mm) on center. The gypsum board must be attached with 6d coated gypsum wallboard nails, complying with ASTM C 514, $1^7/_8$ inches long (47.6 mm), with $^1/_4$-inch-diameter (6.4 mm) heads, at 7 inches (178 mm) on center to studs, plates and blocking. All gypsum board joints must be taped and treated with joint compound complying with ASTM C 840 or GA 216, and backed with minimum nominal 2-by-4 wood framing. Fastener heads must also be treated with joint compound complying with ASTM C 840 or GA 216.

4.4.1.2 Exterior Face: One layer of minimum 48-inch-wide (1219 mm), $^5/_8$-inch-thick (15.9 mm), Type X, water-resistant core gypsum sheathing must be applied vertically to studs with No. 11 gage galvanized roofing nails, $1^3/_4$ inches long (44.5 mm), with $^7/_{16}$- or $^1/_2$-inch-diameter (11.1 or 12.7 mm) heads at 4 inches (102 mm) on center at board edges and 7 inches (178 mm) on center at intermediate studs. The sheathing must be nailed to top and bottom plates at 7 inches (178 mm) on center. A water-resistive barrier must be provided over the sheathing. The lath and coating are then applied, without insulation board, as described in Section 4.2.

4.4.1.3 Axial Load Design: The wood stud axial design stress for the wall assembly calculated in accordance with Sections 3.6 and 3.7 of ANSI AF&PA NDS-05 (IBC and IRC) or ANSI/NFoPA NDS-91 (UBC) is limited to 0.78 F'_c and the maximum stress must not exceed 0.78 F'_c at a maximum slenderness ratio (l_e/d) of 33.

4.4.2 Second Assembly (Limited Load-bearing):

4.4.2.1 Interior Face: One layer of minimum $^5/_8$-inch-thick (15.9 mm), Type X gypsum wallboard, complying with ASTM C 36 or ASTM C 1396 must be applied vertically to minimum nominal 2-by-4 wood studs (minimum specific gravity of 0.50, such as Douglas fir) spaced a maximum of 24 inches (610 mm) on center. Minimum nominal 2-by-4 blocking spaced a maximum of 60 inches (1524 mm) on center must be provided between framing. Wallboard must be attached with $1^5/_8$-inch-long (41 mm), 5d gypsum wallboard nails spaced 8 inches (203 mm) on center to studs, plates and blocking. All wallboard joints must be backed with minimum nominal 2-by-4 wood framing or blocking and must be taped and treated with joint compound complying with ASTM C 840 or GA 216. Fastener heads must also be treated with joint compound complying with ASTM C 840 or GA 216. The stud cavities must be filled with R-11 fiberglass insulation batts having a minimum density of 0.5 pcf (8 kg/m^3) or R-11 Rockwool batt insulation having a minimum density of 1.45 pcf (23.2 kg/m^3) complying with IBC Section 719, IRC Section R302.10, or UBC Section 707, as applicable; or cellulose insulation complying with CPSC 16 CFR, Parts 1209 and 1404, and having a minimum density of 2.6 pcf (41.65 kg/m^3).

4.4.2.2 Exterior Face: One layer of minimum $^1/_2$-inch-thick (12.7 mm), Type X, V-edge gypsum sheathing must be applied horizontally or vertically to wood framing. The sheathing must be temporarily fastened in place with $1^5/_8$-inch-long (41 mm), 5d wallboard nails spaced 12 inches (305 mm) on center to studs, plates and blocking. A water-resistive barrier must be applied over the gypsum sheathing, as described in Section 3.2.9.1. Minimum 2.5-pound-per-square-yard (1.36 kg/m^2) metal lath described in Section 3.2.4.2 must then be attached to all framing members with roofing nails or staples specified in Section 4.2, spaced 6 inches (152 mm) on center. The coating must then be applied to a minimum thickness of $^3/_8$-inch (9.5 mm) as set forth in Section 4.1.

4.4.2.3 Axial Load Design: The allowable axial loading for this system is limited to the least of the following:

1. 285 psi (1.97 Mpa) maximum axial compressive stress per stud.
2. A maximum of 57.6 percent of the load calculated in accordance with Sections 3.6 and 3.7 of the ANSI/AF&PA NDS-05 (IBC and IRC) or ANSI/NFoPA NDS-91 (UBC), as applicable.
3. Design stress of 0.78 $F\mathrm{N}_c$ calculated in accordance with Sections 3.6 and 3.7 of the ANSI/AF&PA NDS-05 (IBC and IRC) or ANSI/NFoPA NDS-91 (UBC), as applicable.

4. Design stress of 0.78 F_{Nc} at a maximum slenderness ratio (l_e/d) of 33 calculated in accordance with Sections 3.6 and 3.7 of the ANSI/AF&PA NDS-05 (IBC and IRC) or ANSI/NFoPA NDS-91 (UBC), as applicable.

4.4.3 Third Assembly (Limited Load-bearing):

4.4.3.1 Interior Face: One layer of minimum $^5/_8$-inch-thick(15.9 mm), Type X gypsum wallboard must be attached horizontally or vertically to minimum nominally 2-by-4 wood studs (minimum specific gravity of 0.50, such as Douglas fir–larch) with $1^5/_8$-inch-long (41.3 mm), galvanized steel, cupped-head, gypsum wallboard nails [having 0.30-inch-diameter (7.62 mm) heads and 0.10-inch diameter (0.254 mm) shanks], spaced at 8 inches (203 mm) on center, to all studs and plates. Horizontal cross bracing is not required. However, when horizontal cross bracing is used, the bracing must be the same grade and species used in wood framing and must be approximately mid-height of wall in each stud cavity; and must be attached to the wood framing with 16d common nails, two at each cross bracing. All vertical wallboard joints must be backed with minimum nominally 2-by-4 wood framing; and all wallboard joints must be taped and treated with joint compound in accordance with ASTM C 840 or GA 216. Fastener heads must also be treated with joint compound in accordance with ASTM C 840. The stud cavities must be filled with kraft-paper-faced or unfaced, R-11 fiberglass insulation batts having a minimum density of 0.5 pcf (8 kg/m^3) or R-11 Rockwool batt insulation having a minimum density of 1.45 pcf (23.2 kg/m^3) and complying with IBC Section 719, IRC Section R302.10, or UBC Section 707, as applicable. When used, the kraft-paper face must be on the interior side of the wall and must be attached to the wood studs. The batt insulation must be stapled to wood studs with No. 24 gage, $^3/_8$-inch-leg (9.5 mm), 0.422-inch-crown (10.72 mm), corrosion-resistant steel staples spaced at 12 inches (305 mm) on center.

4.4.3.2 Exterior Face: The exterior side of the wood studs may be covered with substrates of either EPS or XPS insulation board, or OSB sheathing; or any combination of insulation board and OSB sheathing (partial sheathing).

4.4.3.2.1 Insulation Board over Open Framing: A water-resistive barrier consisting of two layers of Grade D building paper, as described in Section 3.2.9.1, must be applied over the wood studs. One-inch-thick (25.4 mm) EPS, XPS or polyisocyanurate insulation board, as described in Section 3.2.3, must be temporarily attached to studs with metal fasteners. One layer of wire fabric lath, as described in Section 3.2.4.2, must be applied over the insulation board using No. 16 gage, $^{15}/_{16}$ -inch-crown (23.8 mm), galvanized steel staples. The lath must be applied tightly, with $1^1/_2$-inch (38 mm) end and side laps, over the insulation board and fastened through the insulation board and water-resistive barrier to wood studs, sills and plates, at 6 inches (152 mm) on center. Minimum fastener penetration must be 1 inch (25.4 mm) into wood framing. Care must be taken to avoid overdriving fasteners. The Kwik Kote one-coat stucco must then be applied to the lath in accordance with Section 4.1 at a minimum thickness of $^3/_8$ inch (9.5 mm).

4.4.3.2.2 Sheathing Applied to Framing: One layer of $^7/_{16}$-inch-thick (11.1 mm) OSB sheathing must be attached to wood studs and plates with 8d coated sinker nails, $2^3/_8$ inches long (60 mm), spaced at 8 inches (203 mm). Two layers of Grade D building paper must be applied over the OSB, as described in Section 3.2.9.1. When optional 1-inch-thick (25.4 mm) EPS, XPS or polyisocyanurate insulation board, complying with Section 3.2.3, is used, it must be temporarily attached to studs with metal fasteners. One layer of wire fabric lath, as described in Section 3.2.4.2, must be applied over the building paper or optional insulation board, using No. 16 gage, $^{15}/_{16}$-inch-crown (23.8 mm), galvanized steel staples. The lath must be applied tightly, with $1^1/_2$-inch (38 mm) end and side laps, and fastened through the optional insulation board and water-resistive barrier to wood studs, sills and plates at 6 inches (152 mm) on center. Minimum staple penetration must be 1 inch (25.4 mm) into the OSB sheathing and framing. Care must be taken to avoid overdriving fasteners. The Kwik Kote one-coat stucco must then applied to the lath in accordance with Section 4.1 at a minimum thickness of $^3/_8$ inch (9.5 mm).

4.4.3.2.3 Partial Sheathing Applied to Framing: The exterior face may consist of sections of open framing as well as sections of framing covered with sheathing. The sheathing, when used, must be $^7/_{16}$-inch-thick (11.1 mm) OSB sheathing, and must be attached to wood framing with 8d coated sinker nails, $2^3/_8$ inches long (60 mm), spaced at 8 inches (203 mm). Two layers of Grade D building paper, as described in Section 3.2.9.1, must be applied over the exterior face, above any OSB. One-inch-thick (25.4 mm) EPS, XPS or polyisocyanurate insulation board, complying with Section 3.2.3, must be temporarily attached to framing and through any OSB to framing, with metal fasteners. One layer of wire fabric lath, as described in Section 3.2.4.2, must be applied over the insulation board, using No. 16 gage, $^{15}/_{16}$-inch-crown (23.8 mm), galvanized steel staples. The lath must be applied tightly, with $1^1/_2$-inch (38 mm) end and side laps, and fastened through the insulation board and water-resistive barrier to wood studs, sills and plates at 6 inches (152 mm) on center. Minimum staple penetration must be 1 inch (25.4 mm) into the OSB sheathing and framing. Care must be taken to avoid overdriving fasteners. The Kwik Kote one-coat stucco must then applied to the lath in accordance with Section 4.1 at a minimum thickness of $^3/_8$ inch (9.5 mm).

4.4.3.3 Axial Load Design: The axial load applied to the wall assembly for this system is limited to the least of the following:

1. 210 psi (131 kpa) maximum axial compressive stress per stud.
2. A maximum of 47.5 percent of the load calculated in accordance with Sections 3.6 and 3.7 of ANSI/AF&PA NDS-05 (IBC and IRC) or ANSI/NFoPA NDS-91 (UBC), as applicable.
3. Design stress of 0.78 F_{Nc} calculated in accordance with Sections 3.6 and 3.7 of the ANSI/AF&PA NDS-05 (IBC and IRC) or ANSI/NFoPA NDS-91 (UBC), as applicable.
4. Design stress of 0.78 F_{Nc} at a maximum slenderness ratio (l_e/d) of 33 calculated in accordance with Sections 3.6 and 3.7 of the ANSI/AF&PA NDS-05 (IBC and IRC) or ANSI/NFoPA NDS-91 (UBC), as applicable.

4.5 Noncombustible Construction:

For purposes of this report, noncombustible construction includes Types I, II, III and IV construction under the IBC and Types I and II construction under the UBC.

The stucco system with EPS foam plastic insulation board, as described in Section 3.2.3.1, must be installed in accordance with Sections 4.5.1 through 4.5.6.

4.5.1 Interior Finish: One layer of minimum $^1/_2$-inch-thick (12.7 mm) gypsum wallboard, complying with ASTM C 36

or ASTM C 1396, must be applied horizontally or vertically to cold-formed steel wall framing using No. 6, $1^1/_4$-inch-long (31.75 mm), self-drilling drywall screws or equivalent metal fasteners recognized in a current ICC-ES evaluation report, spaced at 8 inches (203 mm) on center along all perimeter ends and edges of the gypsum wallboard, and 12 inches (305 mm) on center in the field. Wallboard joints are not required to be blocked with horizontal cross bracing. When horizontal cross bracing is used, it must be the same type and gage as the steel framing. The horizontal cross bracing must be installed at approximately mid-height of the wall in each stud cavity and attached with metal fasteners recognized in a current ICC-ES evaluation report, two at each cross-bracing piece. The joints and nail heads must be treated with two coats with joint compound complying with ASTM C 840 or GA 216. A nominally 2-inch-wide (51 mm) paper, plastic, or fiberglass tape must be embedded in the first layer of joint compound over the joints in gypsum board.

4.5.2 Steel Framing: The steel framing is minimum $3^5/_8$-inch-deep (92 mm), minimum No. 20 gage [0.0359 inch (0.91 mm)] steel studs, spaced a maximum of 16 inches (406 mm) on center.

4.5.3 Openings: Wall openings are framed with minimum 0.125-inch-thick (3.2 mm) steel framing. Galvanized steel J-shaped trim pieces, measuring $1^3/_4$ inches high (44 mm) by $1^1/_2$ inches deep (37 mm) by $^1/_4$ inch thick (6.4 mm), must be installed around the perimeter of openings and at other areas where insulation board is exposed.

4.5.4 Exterior Finish: One layer of minimum $^{15}/_{32}$-inch-thick (11.9 mm) OSB sheathing must be oriented horizontally and attached to cover all steel framing using No. 6, $1^5/_8$-inch-long (41.3 mm), self-drilling drywall screws spaced at 8 inches (203 mm) on center on all perimeter ends and edges of the OSB sheathing, and 12 inches (305 mm) on center in the field of the OSB.

4.5.5 Stucco System: One layer of a Grade D kraft building paper having a minimum water-resistance rating of 60 minutes, a flame-spread index of 25 or less and a smoke developed index of 450 or less, is installed over the sheathing in accordance with IBC Section 1404.2 or UBC Section 1402.1, as applicable. Type II expanded polystyrene (EPS) grooved board, 1 inch (25.4 mm) thick and having a nominal density of 1.5 pcf (24 kg/m^3) as described in Section 3.2.3.1, must be temporarily attached to framing with metal fasteners. Galvanized steel J-shaped trim pieces, measuring $3^5/_8$ inches high (92 mm) by $1^1/_2$ inches deep (37 mm) by $^1/_4$ inch thick (6.4 mm), with $^1/_4$-inch-diameter (6.4 mm) holes spaced 4 inches (102 mm) on center, must be installed at the bottom of the wall. See Figures B through E for typical installation details. At windows and doors, butting J-trim metal edges, when installed, must be caulked. The edge of insulation boards must be chamfered when in contact with the J-shaped trim pieces. One layer of 1-inch (25.4 mm), 20 gage, woven wire lath described in Section 3.2.4.1 must be applied over the insulation board with a minimum 2-inch (51 mm) overlap, and attached to framing using 2-inch-long (51 mm), corrosion-resistant, self-drilling drywall screws spaced a maximum of 7 inches (178 mm) on center. The Kwik Kote one-coat stucco as described in Section 3.2.1 must then applied to the metal lath in accordance with Section 4.1 at a minimum thickness of $^3/_8$ inch (9.5 mm).

4.6 Miscellaneous:

4.6.1 Inspection Requirements: Building department inspection is required on metal lath installation prior to application of the coating as required by the applicable code.

4.6.2 Control Joints: Control joints must be installed as specified by the architect or designer, builder or exterior coating manufacturer, in that order.

4.6.3 Curing: Moist curing must be provided for a minimum of 24 hours after coating application. The length of time and most effective procedure for moist curing will depend on climatic and job conditions.

4.6.4 Soffits: The system may be applied to soffits, provided the coating is applied over metal lath complying with Section 3.2.4.2 in lieu of wire fabric lath. Metal lath fastening must comply with ASTM C 926 or ASTM C 1063 (IBC), IRC Section R703.6.1, or UBC Table 25-C, as applicable, except that the fastener length must be increased by the thickness of any substrate.

4.6.5 Sills: The system may be applied to sills at locations such as windows and similar areas. Sills with depths of 6 inches (152 mm) or less may have the coating, as described in Section 3.2.1, and lath applied to any substrate permitted in this report, provided the coating, lath, water-resistive barrier and substrate are installed in accordance with the applicable sections of this report. Sills with depths exceeding 6 inches (152 mm) must have substrates of solid wood or plywood. The substrate must be fastened in accordance with IBC Table 2304.9.1, IRC Section R602.3, or UBC Table 23-II-B-1, as applicable, and a double layer of Grade D water-resistive barrier is applied over the substrate. The lath, optional foam plastic insulation board, and coating must be applied in accordance with Section 4.2.

5.0 CONDITIONS OF USE

The Kwik Kote one-coat stucco systems described in this report comply with, or are suitable alternatives to what is specified in, those codes listed in Section 1.0, subject to the following conditions:

5.1 Materials and methods of installation must comply with this report and the manufacturer's published installation instructions. If there is a conflict between this report and the manufacturer's published installation instructions, this report governs.

5.2 Installation must be by contractors approved by Kwik Kote Corporation.

5.3 The system is recognized as a one-hour fire-resistance-rated assembly when installed in accordance with Section 4.4.

5.4 The coating system may be installed on walls required to be of noncombustible construction in accordance with Section 4.5.

5.5 In jurisdictions adopting the UBC, the coating system, without insulation board, is permitted to be attached to the surface of combustible exterior fire-resistive assemblies described in UBC Table 7B without a change in the assigned hourly rating of the assembly.

5.6 The interior of the building must be separated from the insulation board with a thermal barrier complying with the applicable code, such as $^1/_2$-inch-thick (12.7 mm) regular gypsum wallboard mechanically attached in accordance with the code.

5.7 A completed installation card, as shown in Figure F, must be left at the jobsite with the owner, and a copy filed with the building department.

5.8 Foam plastic insulation board on exterior walls of wood construction must be located at least 6 inches (152 mm) from the ground where hazard of termite damage is very heavy, in accordance with IBC

Section 2603.8, 2009 IRC Section 318.4, or 2006 IRC Section 320.5, as applicable.

5.9 The allowable wind load on the systems with wood or steel framing 24 inches (610 mm) on center, maximum, is 35 psf (1676 Pa), positive or negative. Support framing must be adequate to resist the required wind load, with a maximum allowable deflection of $^{1}/_{240}$ of the span.

6.0 EVIDENCE SUBMITTED

6.1 Data in accordance with the ICC-ES Acceptance Criteria for Cementitious Exterior Wall Coatings (AC11), dated March 2010.

6.2 Reports of tests of fire-resistance-rated assemblies in accordance with ASTM E119 (UBC Standard 7-1), including an engineering evaluation of the tested fire-resistance-rated assemblies.

6.3 Report of testing in accordance with NFPA 285 (UBC Section 26-4), for use in noncombustible construction.

7.0 IDENTIFICATION

7.1 Mixes:

The factory-prepared mixes must be delivered to the jobsite in water-resistant bags or containers with labels bearing the following information:

a. Name and address of manufacturer (Kwik Kote Corporation) and the evaluation report number (ESR-1711).

b. Identification of components.

c. Weight or volume of packaged mix.

d. Storage instructions.

e. Maximum amount of water and other components that may be added and conditions that shall be considered in determining actual amount.

f. Curing instructions.

7.2 Boards:

7.2.1 Insulation boards must be identified in accordance with their respective ICC-ES evaluation reports. Additionally, the board density of insulation boards must be noted. When application is to walls required to be of noncombustible construction, along one edge of each board, and on both faces of one board in each package, the foam plastic must be labeled with the name “Kwik Kote One Coat Stucco” and the evaluation report number (ESR-1711); and the information required by the insulation board’s ICC-ES evaluation report.

7.2.2 Fome-Cor Board must be indentified in accordance with evaluation report ESR-1614.

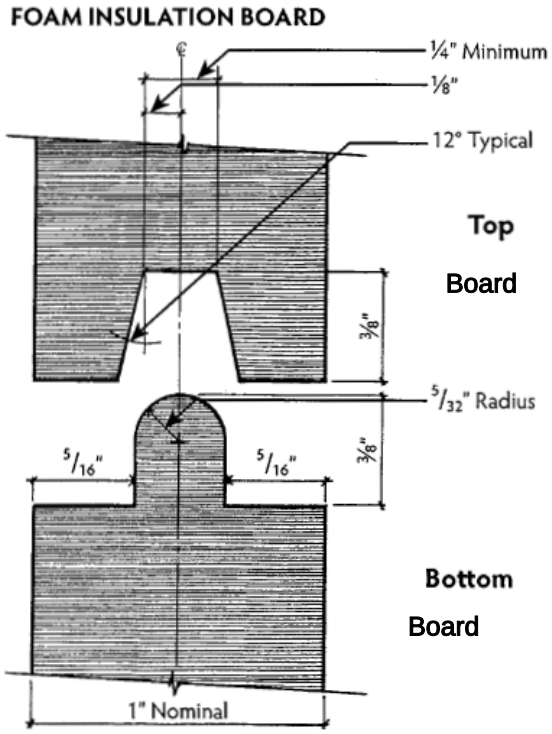

FIGURE A: TONGUE & GROOVE DETAIL

GENERAL NOTES FOR ALL DETAILS

A. All details exploded for clarity - not to scale
B. All details represent typical installations - see manufacturer's installation manual for additional details
C. Installation by designated licensed trade contractor(s) in accordance with plans, specifications, this report and all applicable building codes and regulations

KEYNOTES FOR FIGURES A, B & C

1. Kwik-Kote Stucco
2. 1″ x 20 gauge wire mesh (as key mechanism for stucco)
3. Insulation board
4. Grade "D" building paper or other approved weather resistive membrane
5. Caulk
6. Termination screed at foundation
7. Termination screed
8. Flashing
9. Roof Deck weather resistive membrane

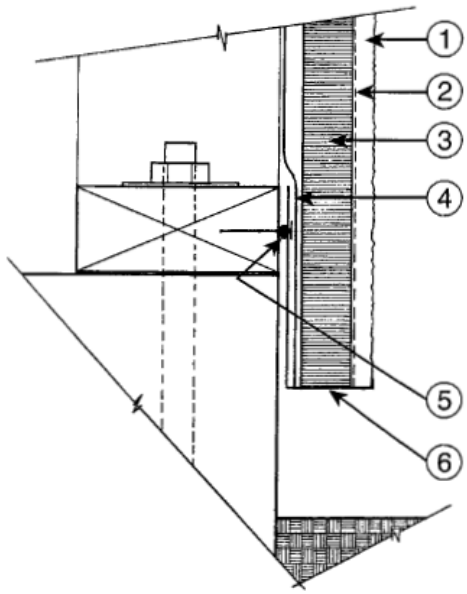

FIGURE B: TERMINATION WEEP SCREED

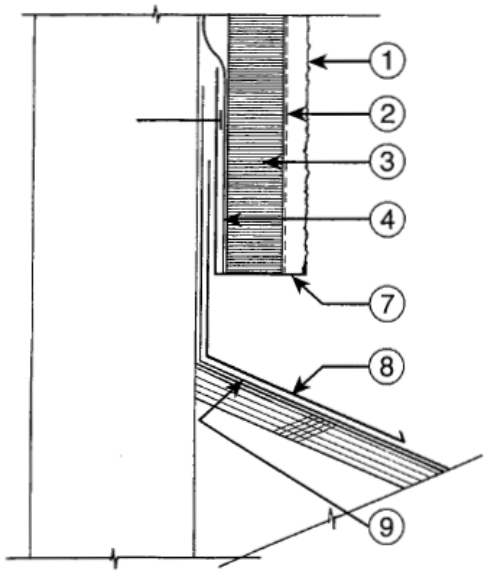

FIGURE C: TERMINATION WEEP SCREED AT ROOF/WALL

TYPICAL INSTALLATION DETAILS

GENERAL NOTES FOR ALL DETAILS

A. All details exploded for clarity - not to scale
B. All details represent typical installations - see manufacturer's installation manual for additional details
C. Installation by designated licensed trade contractor(s) in accordance with plans, specifications, this report and all applicable building codes and regulations

KEYNOTES FOR FIGURES D & E

1. Kwik-Kote Stucco
2. 1″ x 20 gauge wire mesh (as key mechanism for stucco)
3. Insulation board
4. Grade "D" building paper or other approved weather resistive membrane
5. Caulk
6. Not used
7. Not used
8. Not used
9. Not used
10. Grade "D" building paper or other approved weather resistive membrane applied under sill flashing
11. Caulk
12. Window flashing
13. Grade "D" building paper or other approved weather resistive membrane applied as secondary barrier over nail fin applied in bib position
14. Sheet metal "Z" flashing

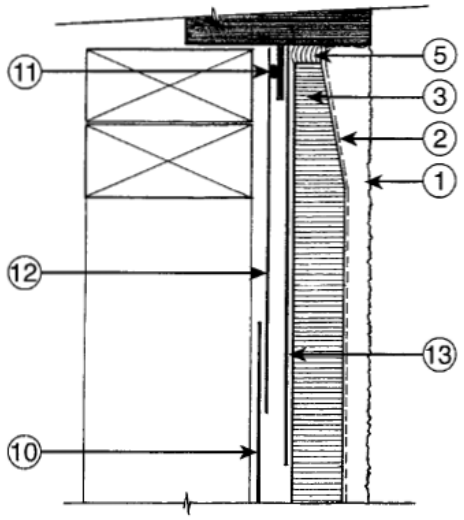

FIGURE D: FLUSH WINDOW – SECTION AT SILL

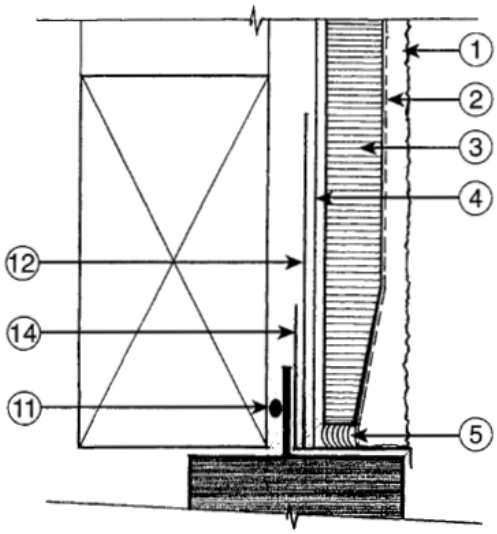

FIGURE E: FLUSH WINDOW – SECTION AT HEAD

TYPICAL INSTALLATION DETAILS (Continued)

NOTE: When installation is over solid substrates, the water resistive barrier must be installed over all substrates and behind the optional insulation board. When installation is over open framing, the water resistive barrier must be installed behind the insulation board. See Section 3.2.9.1.

KWIK KOTE™
STUCCO SYSTEM

INSTALLATION CARD

Job Address:

_____

_____

_____

Stucco System Tradename: KWIK KOTE

Name of Stucco Manufacturer: KWIK KOTE CORP.

ICC Evaluation Service, LLC
Evaluation Report ESR-1711
Date of Job Completion _____

Stucco Contractor

Name: _____

Address: _____

_____

Telephone Number: _____

Approved Contractor Number as issued by KWIK KOTE.

This is to certify that the stucco system on the building exterior at the above address has been installed in accordance with the evaluation report specified above and the KWIK KOTE instructions.

_____
Signature of authorized representative of stucco contractor

_____
Date

FIGURE F